Thyristor Modules
Thyristor/Diode Modules

I_{TRMS} = 2x180 A
I_{TAVM} = 2x116 A
V_{RRM} = 800-1800 V

V_{RSM} V_{DSM} V	V_{RRM} V_{DRM} V	Type Version	1 B	8 B	Version	1 B	8 B
900	800	MCC 95-08	io1 B /	io8 B	MCD 95-08	io1 B /	io8 B
1300	1200	MCC 95-12	io1 B /	io8 B	MCD 95-12	io1 B /	io8 B
1500	1400	MCC 95-14	io1 B /	io8 B	MCD 95-14	io1 B /	io8 B
1700	1600	MCC 95-16	io1 B /	io8 B	MCD 95-16	io1 B /	io8 B
1900	1800	MCC 95-18	io1 B /	io8 B	MCD 95-18	io1 B /	io8 B

TO-240 AA

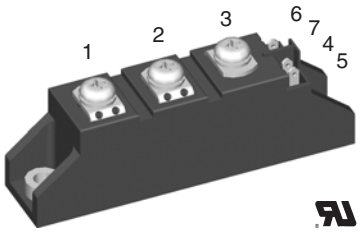

Symbol	Conditions		Maximum Ratings	
I_{TRMS}, I_{FRMS}	$T_{VJ} = T_{VJM}$		180	A
I_{TAVM}, I_{FAVM}	T_C = 85°C; 180° sine		116	A
I_{TSM}, I_{FSM}	T_{VJ} = 45°C	t = 10 ms (50 Hz), sine	2250	A
	V_R = 0	t = 8.3 ms (60 Hz), sine	2400	A
	$T_{VJ} = T_{VJM}$	t = 10 ms (50 Hz), sine	2000	A
	V_R = 0	t = 8.3 ms (60 Hz), sine	2150	A
$\int i^2dt$	T_{VJ} = 45°C	t = 10 ms (50 Hz), sine	25 300	A^2s
	V_R = 0	t = 8.3 ms (60 Hz), sine	23 900	A^2s
	$T_{VJ} = T_{VJM}$	t = 10 ms (50 Hz), sine	20 000	A^2s
	V_R = 0	t = 8.3 ms (60 Hz), sine	19 100	A^2s
$(di/dt)_{cr}$	$T_{VJ} = T_{VJM}$; f = 50 Hz; t_P = 200 µs $V_D = {}^2/_3\ V_{DRM}$;	repetitive, I_T = 250 A	150	A/µs
	I_G = 0.45 A; di_G/dt = 0.45 A/µs	non repetitive, $I_T = I_{TAVM}$	500	A/µs
$(dv/dt)_{cr}$	$T_{VJ} = T_{VJM}$; $R_{GK} = \infty$; method 1 (linear voltage rise)	$V_{DR} = {}^2/_3\ V_{DRM}$	1000	V/µs
P_{GM}	$T_{VJ} = T_{VJM}$;	t_P = 30 µs	10	W
	$I_T = I_{TAVM}$;	t_P = 300 µs	5	W
P_{GAV}			0.5	W
V_{RGM}			10	V
T_{VJ}			-40...+125	°C
T_{VJM}			125	°C
T_{stg}			-40...+125	°C
V_{ISOL}	50/60 Hz, RMS;	t = 1 min	3000	V~
	$I_{ISOL} \leq$ 1 mA;	t = 1 s	3600	V~
M_d	Mounting torque (M5)		2.5-4.0/22-35	Nm/lb.in.
	Terminal connection torque (M5)		2.5-4.0/22-35	Nm/lb.in.
Weight	Typical including screws		90	g

Data according to IEC 60747 and refer to a single thyristor/diode unless otherwise stated.

MCC Version 1

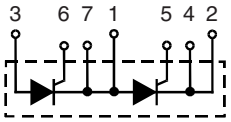

MCD Version 1

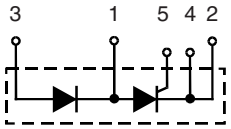

MCC Version 8

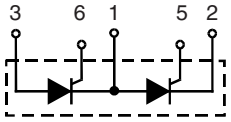

MCD Version 8

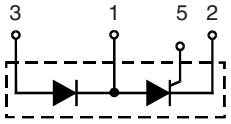

Features

- International standard package, JEDEC TO-240 AA
- Direct copper bonded Al_2O_3 -ceramic base plate
- Planar passivated chips
- Isolation voltage 3600 V~
- UL registered, E72873
- Gate-cathode twin pins for version 1

Applications

- DC motor control
- Softstart AC motor controller
- Light, heat and temperature control

Advantages

- Space and weight savings
- Simple mounting with two screws
- Improved temperature and power cycling
- Reduced protection circuits

IXYS reserves the right to change limits, test conditions and dimensions.

Symbol	Conditions		Characteristic Values	
I_{RRM}, I_{DRM}	$T_{VJ} = T_{VJM}$; $V_R = V_{RRM}$; $V_D = V_{DRM}$		5	mA
V_T, V_F	I_T/I_F = 300 A; T_{VJ} = 25°C		1.5	V
V_{T0}	For power-loss calculations only (T_{VJ} = 125°C)		0.8	V
r_T			2.4	mΩ
V_{GT}	V_D = 6 V;	T_{VJ} = 25°C	2.5	V
		T_{VJ} = -40°C	2.6	V
I_{GT}	V_D = 6 V;	T_{VJ} = 25°C	150	mA
		T_{VJ} = -40°C	200	mA
V_{GD}	$T_{VJ} = T_{VJM}$;	$V_D = {}^2/_3\ V_{DRM}$	0.2	V
I_{GD}			10	mA
I_L	T_{VJ} = 25°C; t_P = 10 µs; V_D = 6 V I_G = 0.45 A; di_G/dt = 0.45 A/µs		450	mA
I_H	T_{VJ} = 25°C; V_D = 6 V; $R_{GK} = \infty$		200	mA
t_{gd}	T_{VJ} = 25°C; V_D = ½ V_{DRM} I_G = 0.45 A; di_G/dt = 0.45 A/µs		2	µs
t_q	$T_{VJ} = T_{VJM}$; I_T = 150 A, t_P = 200 µs; -di/dt = 10 A/µs V_R = 100 V; dv/dt = 20 V/µs; $V_D = {}^2/_3\ V_{DRM}$	typ.	185	µs
Q_S	$T_{VJ} = T_{VJM}$; I_T/I_F = 50 A, -di/dt = 6 A/µs		170	µC
I_{RM}			45	A
R_{thJC}	per thyristor/diode; DC current	other values see Fig. 8/9	0.22	K/W
	per module		0.11	K/W
R_{thJK}	per thyristor/diode; DC current		0.42	K/W
	per module		0.21	K/W
d_S	Creepage distance on surface		12.7	mm
d_A	Strike distance through air		9.6	mm
a	Maximum allowable acceleration		50	m/s^2

Optional accessories for module-type MCC 95 version 1 B
Keyed gate/cathode twin plugs with wire length = 350 mm, gate = yellow, cathode = red
Type **ZY 200L** (L = Left for pin pair 4/5) } UL 758, style 1385,
Type **ZY 200R** (R = right for pin pair 6/7) } CSA class 5851, guide 460-1-1

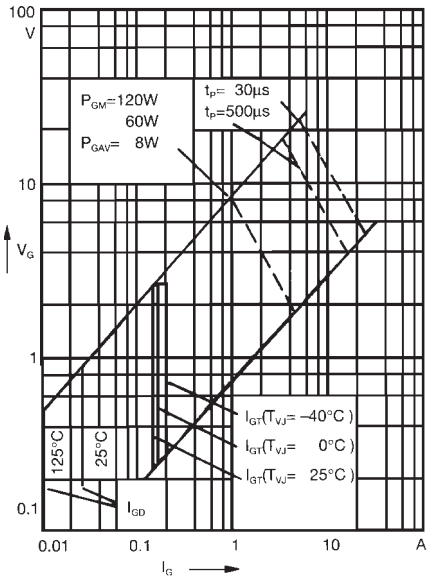

Fig. 1 Gate trigger characteristics

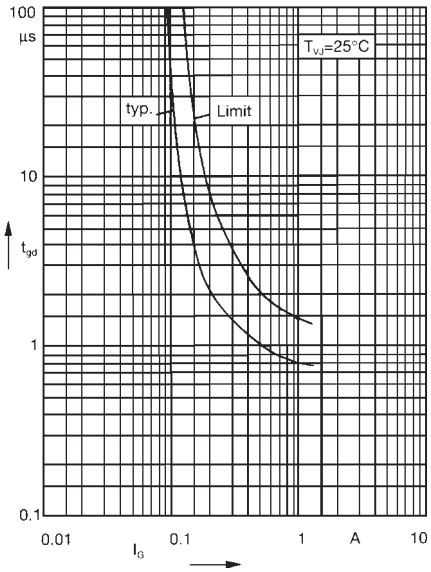

Fig. 2 Gate trigger delay time

Dimensions in mm (1 mm = 0.0394")

MCC / MCD Version 1 B

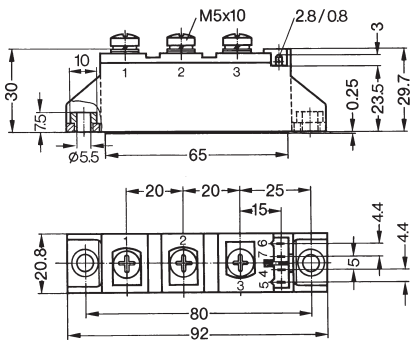

MCC Version 8 B

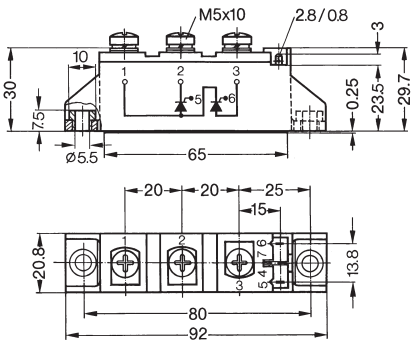

MCD Version 8 B

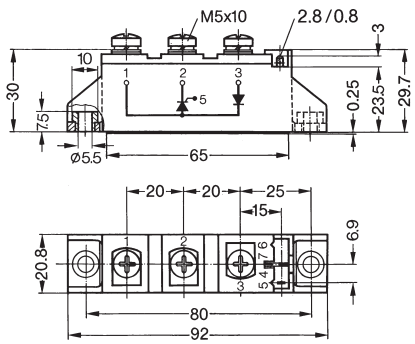

Version 1 or 8 without B in typ designation = without insert in mountig holes

IXYS reserves the right to change limits, test conditions and dimensions. 20070824

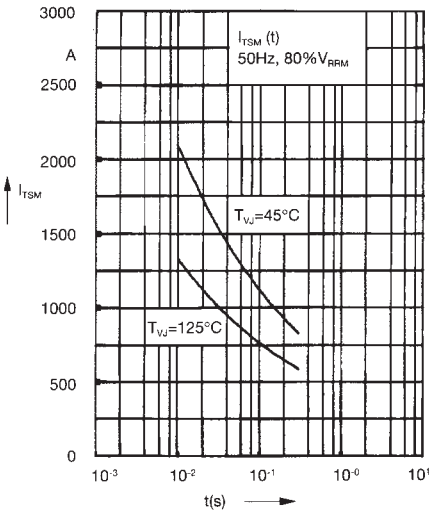

Fig. 3 Surge overload current
I_{TSM}, I_{FSM}: Crest value, t: duration

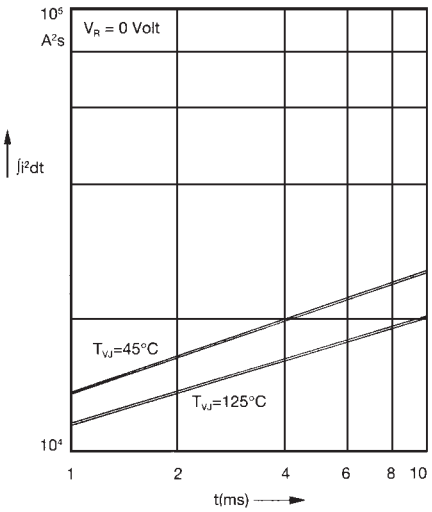

Fig. 4 $\int i^2dt$ versus time (1-10 ms)

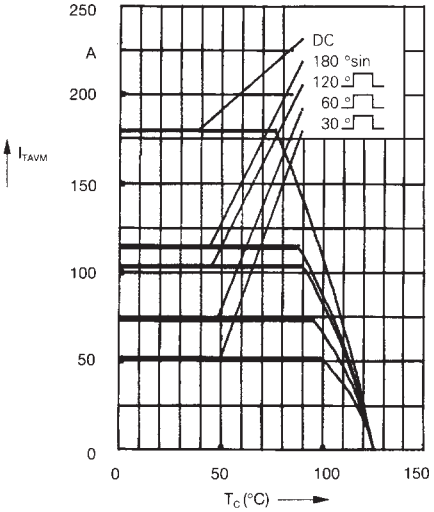

Fig. 4a Maximum forward current at case temperature

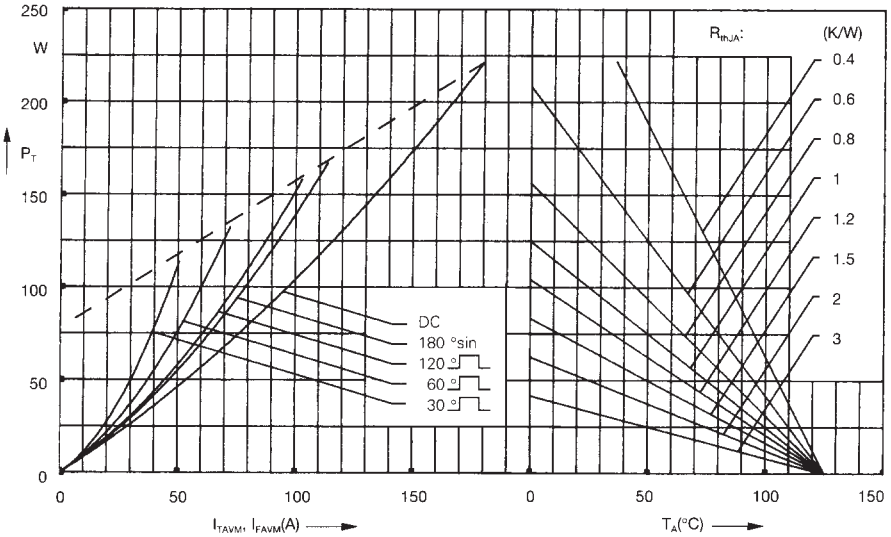

Fig. 5 Power dissipation versus on-state current and ambient temperature (per thyristor or diode)

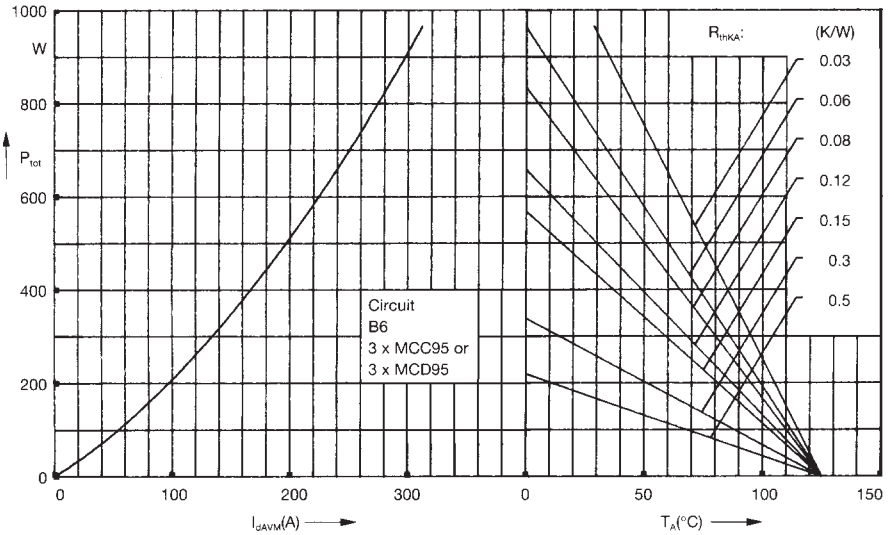

Fig. 6 Three phase rectifier bridge: Power dissipation versus direct output current and ambient temperature

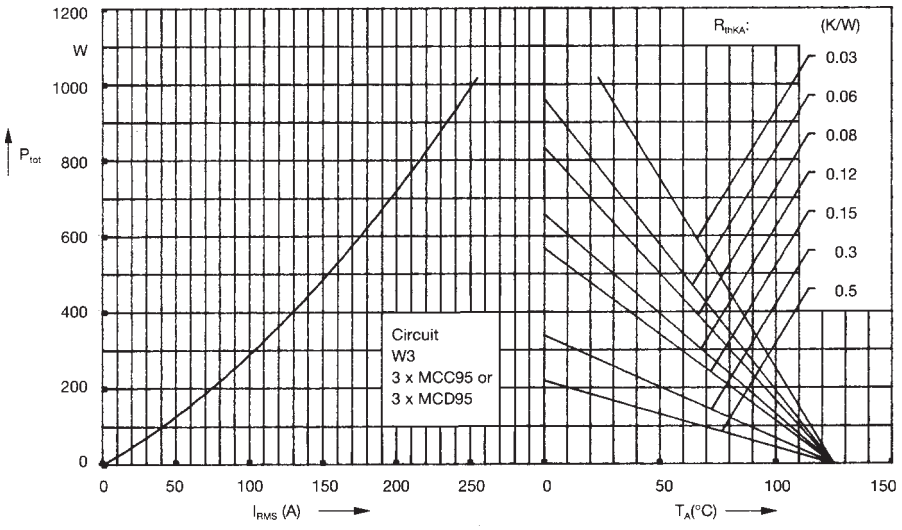

Fig. 7 Three phase AC-controller: Power dissipation versus RMS output current and ambient temperature

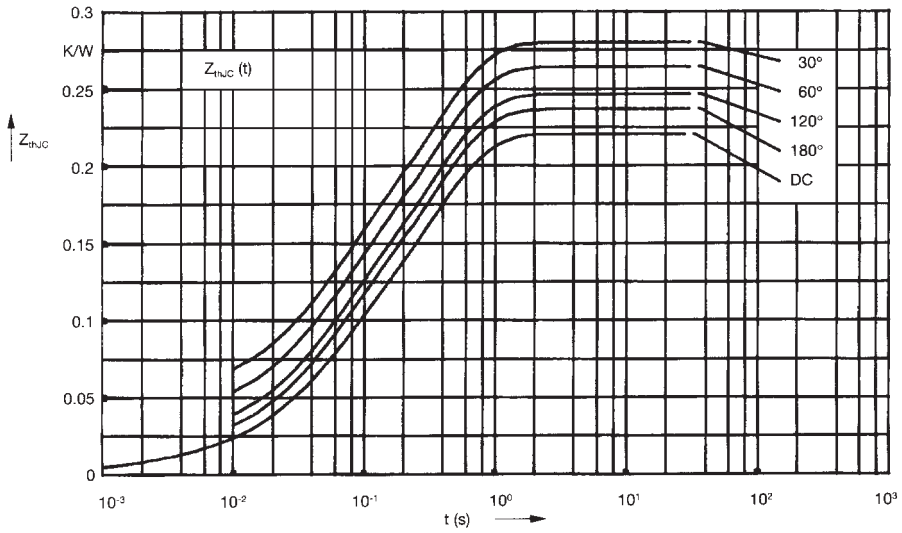

Fig. 8 Transient thermal impedance junction to case (per thyristor or diode)

R_{thJC} for various conduction angles d:

d	R_{thJC} (K/W)
DC	0.22
180°	0.23
120°	0.25
60°	0.27
30°	0.28

Constants for Z_{thJC} calculation:

i	R_{thi} (K/W)	t_i (s)
1	0.0066	0.0019
2	0.0678	0.0477
3	0.1456	0.344

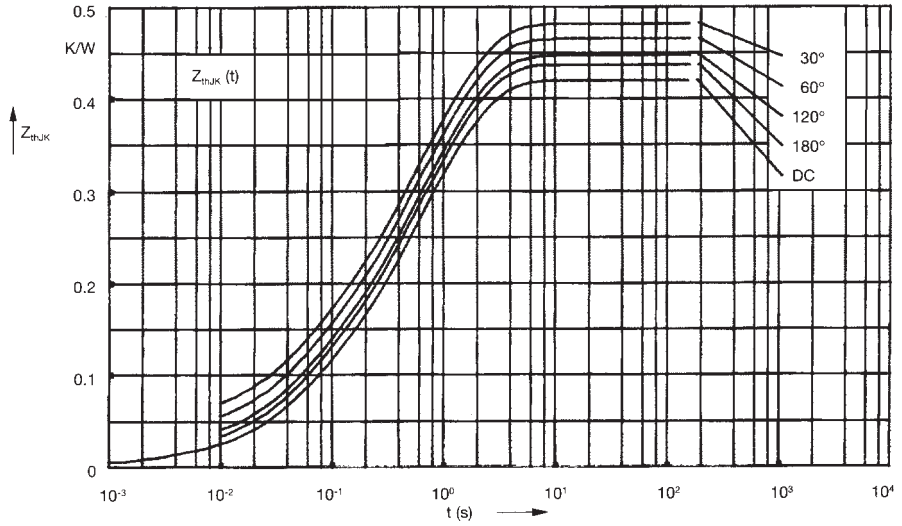

Fig. 9 Transient thermal impedance junction to heatsink (per thyristor or diode)

R_{thJK} for various conduction angles d:

d	R_{thJK} (K/W)
DC	0.42
180°	0.43
120°	0.45
60°	0.47
30°	0.48

Constants for Z_{thJK} calculation:

i	R_{thi} (K/W)	t_i (s)
1	0.0066	0.0019
2	0.0678	0.0477
3	0.1456	0.344
4	0.2	1.32